College Hall Network Map

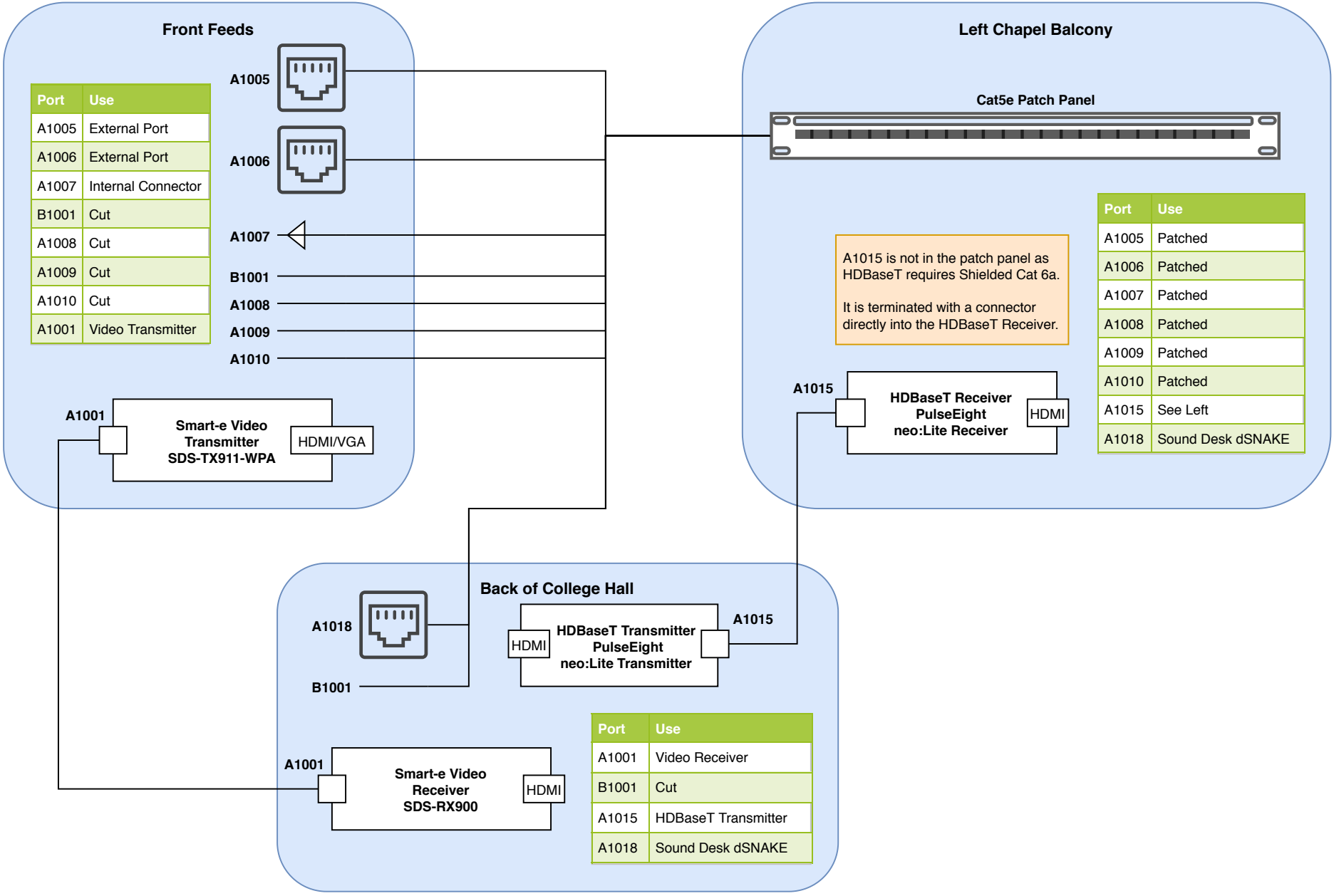

Port	Use
A1005	External Port
A1006	External Port
A1007	Internal Connector
B1001	Cut
A1008	Cut
A1009	Cut
A1010	Cut
A1001	Video Transmitter

Port	Use
A1005	Patched
A1006	Patched
A1007	Patched
A1008	Patched
A1009	Patched
A1010	Patched
A1015	See Left
A1018	Sound Desk dSNAKE

Port	Use
A1001	Video Receiver
B1001	Cut
A1015	HDBaseT Transmitter
A1018	Sound Desk dSNAKE

College Hall Video Map

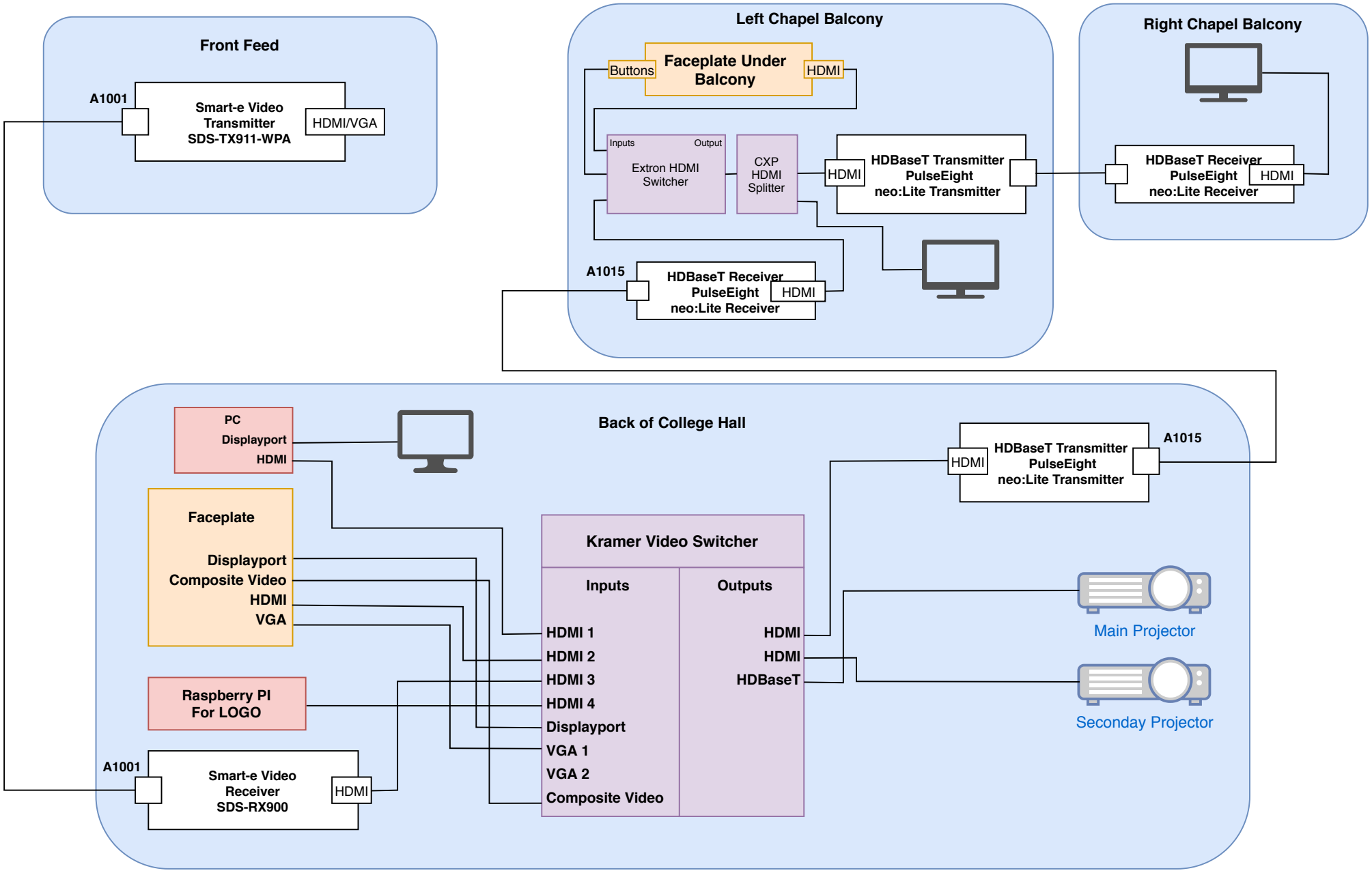
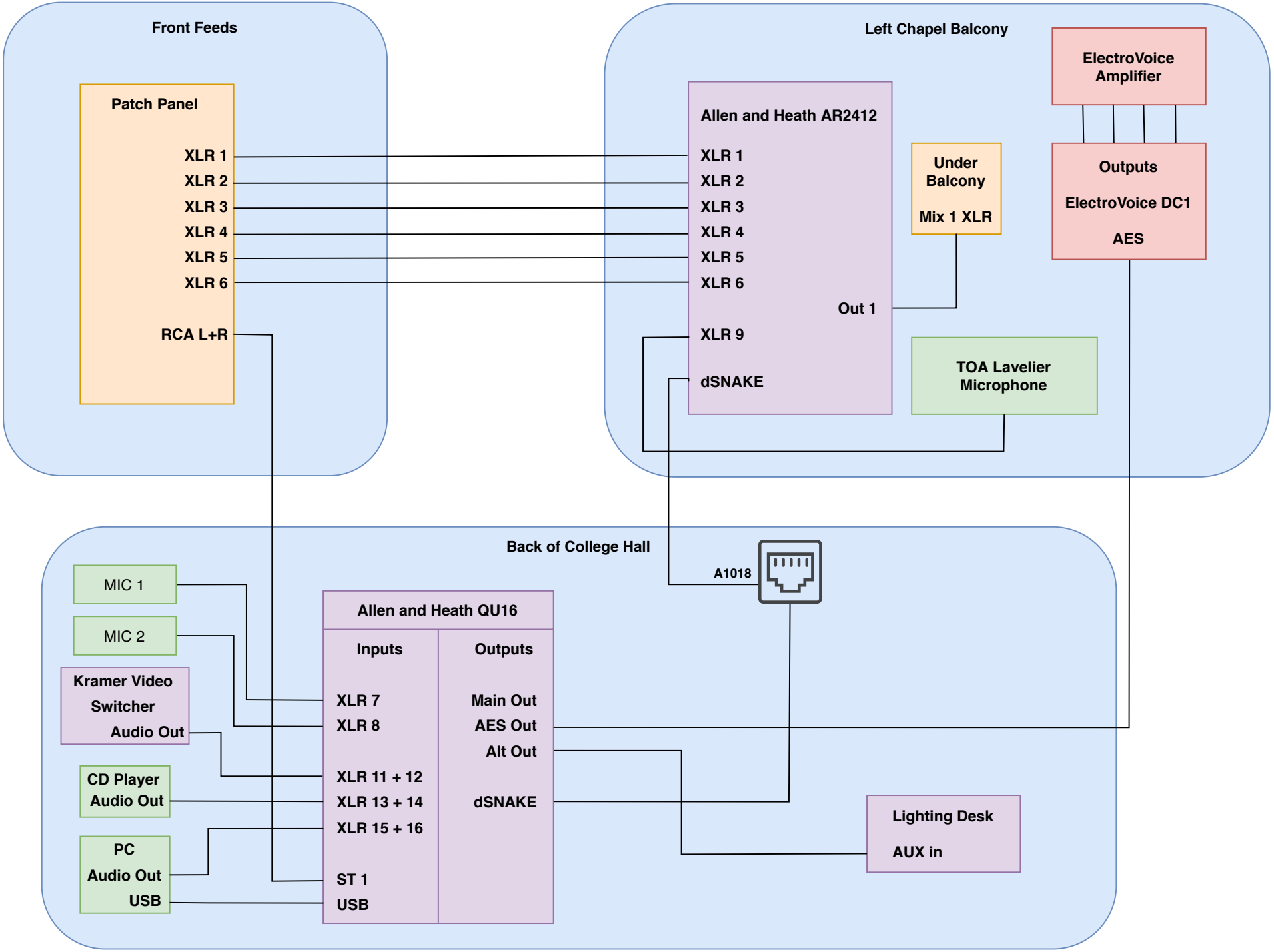
College Hall Audio Map